PB105 and PB110 connection information for non-NCE DCC systems

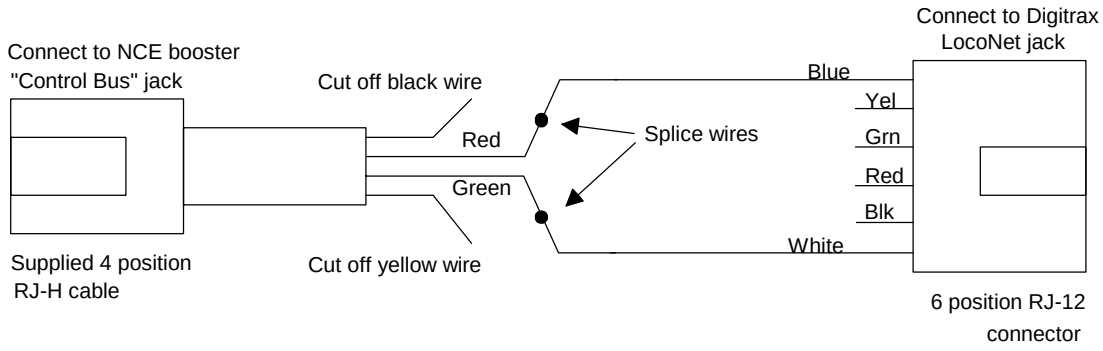

NOTE: Connect one of the NCE booster cover screws to the ground connection of other boosters in the system

Connection from Digitrax command station to NCE boosters

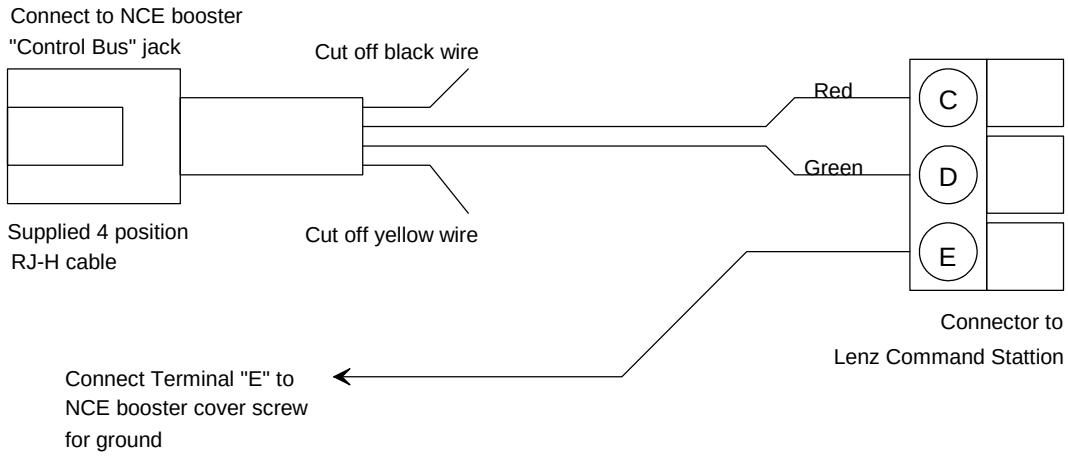

Connection from Lenz command station to NCE booster

NCE Corporation **899 Ridge Road** **Webster, New York 14580**

585-671-0370 Phone **585-671-9337 fax**