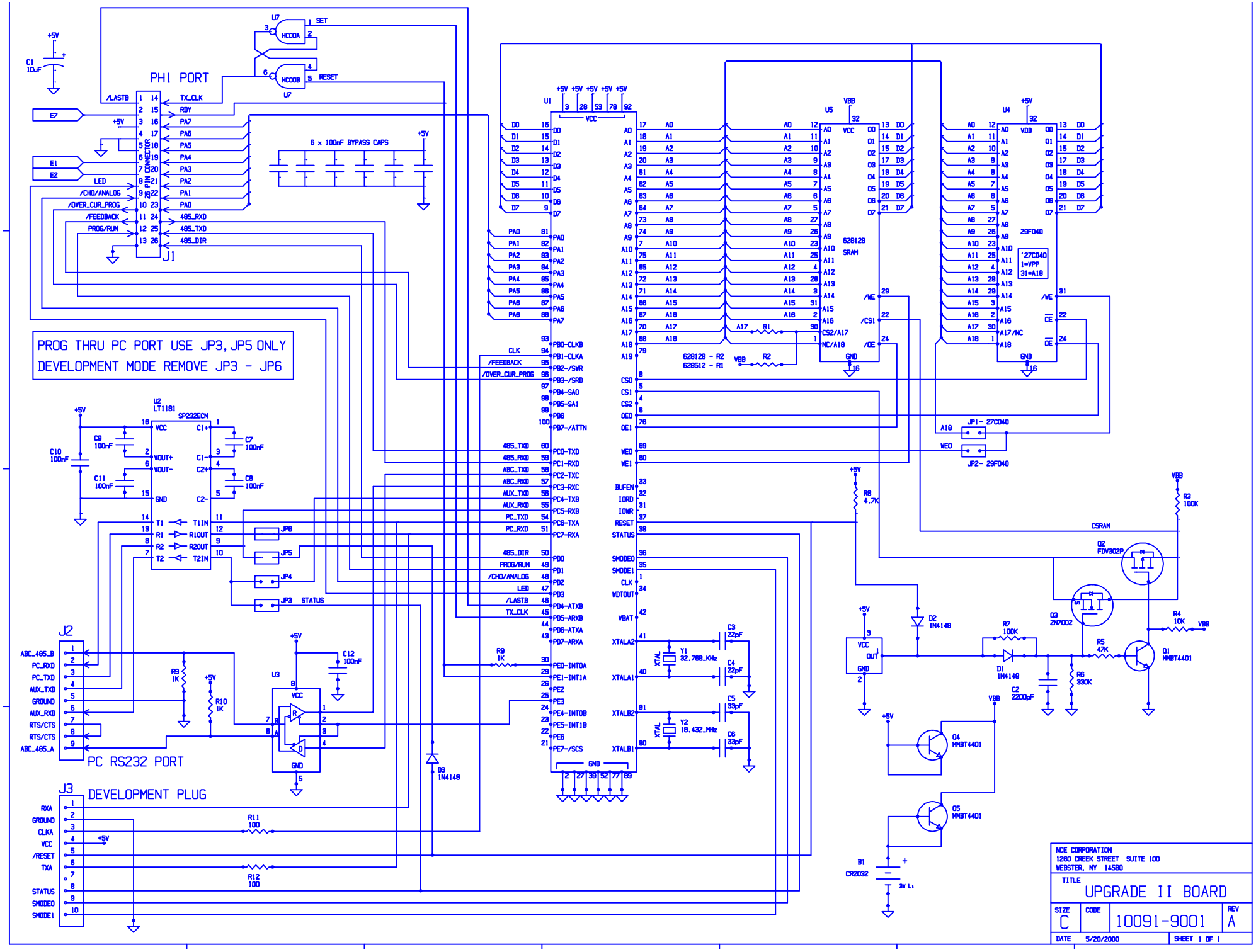
PH1 PORT
J1
PROG THRU PC PORT USE JP3, JP5 ONLY
DEVELOPMENT MODE REMOVE JP3 - JP6
6 x 100nF BYPASS CAPS
U1
U2
LT1181
SP232ECN
U3
U4
29F040
U5
628128
SRAM
628128 - R2
628512 - R1
U6
J2
PC RS232 PORT
J3
DEVELOPMENT PLUG
JP1- 27C040
JP2- 29F040
JP3 STATUS
JP4
JP5
JP6
Y1
32.768_KHz
Y2
18.432_MHz
Q1
MMBT4401
Q2
FDV302P
Q3
2N7002
Q4
MMBT4401
Q5
MMBT4401
B1
CR2032
NCE CORPORATION
1260 CREEK STREET SUITE 100
WEBSTER, NY 14580
TITLE
UPGRADE II BOARD
SIZE
C
CODE
10091-9001
REV
A
DATE
5/20/2000
SHEET 1 OF 1